BER-VAC

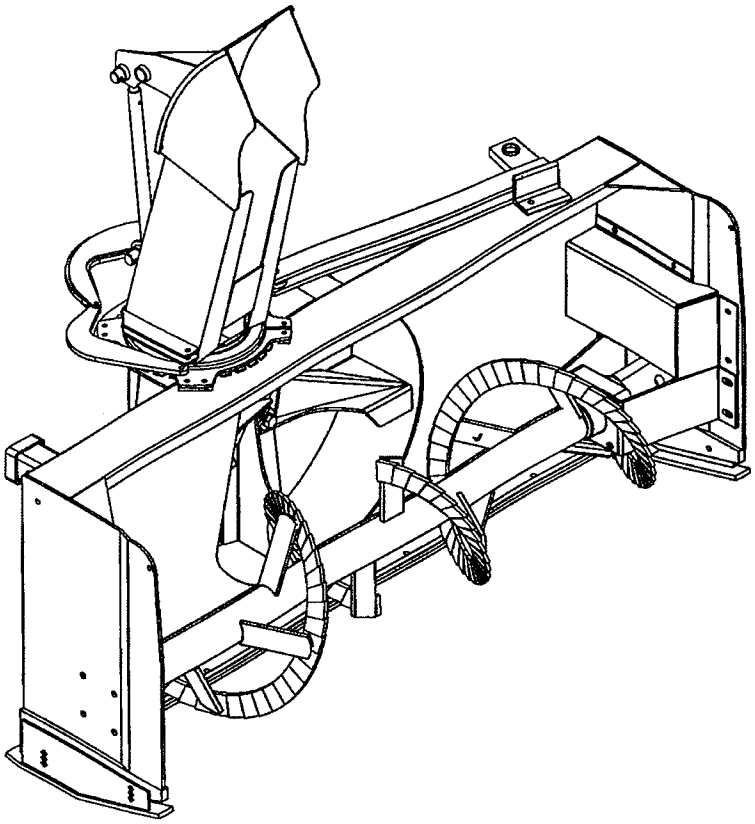

PARTS MANUAL

64" HYDRAULIC SNOWBLOWER – H64
76" HYDRAULIC SNOWBLOWER – H76
84" HYDRAULIC SNOWBLOWER – H84

SERIAL NO. 2704675 AND UP

INTERTEK
ISO 9001:2000

PM 0303SB-A
08/07

TABLE OF CONTENT

INTRODUCTION 2
TORQUE SPECIFICATION TABLE 3
PARTS 4
- Decals 4
- Hydraulic Snowblower H64, H76 & H84 6
- Hydraulic System 8
- Chute – for H64 10
- Chute – for H76 11
- Chute Rotation – for H64 12
- Chute Rotation – for H76 & H84 13
- Universal Hitch – 8153 14
- Drift Cutters – 8152 15
- Hydraulic Rotation - 8183 16
- Hydraulic Deflector - 8184 18
- Electric Rotation & Deflector - 8151 20
- Electric Deflector - 8154 21
- Hydraulic Motor 22

WARRANTY 24

INTRODUCTION

All parts are illustrated in "exploded views" which show the individual parts in their normal relationship to each other. Reference numbers are used in the illustrations. These numbers correspond to those in the "Reference Number" (REF) column, and are followed by the description and quantity required.

O/L - "Obtain Locally" in the part number column indicates common hardware that is available at your local hardware supply.

All reference to right and left, forward or rearward, are from the operator seat, looking at the machine while operating.

Orders must give the complete description, correct part number, the total amount required, the serial number, the method of shipment and the shipping address.

The manufacturer reserves the rights to change, modify, or eliminate from time to time, for technical or other reasons, certain or all data, specifications, or the product or products themselves, without any liability or obligation.

The parts listed here are available through your local dealer.

GENERAL SPECIFICATION TABLE

Use the following torques when special torques are not given. Note: These values apply to fasteners as received from supplier, when dry. These values do not apply if lubricants are used.

BOLT SIZES (SAE)	TORQUE	
INCHES	Pounds-Foot	Newtons-Meter
1/4	5	7
5/16	10	14
3/8	20	27
7/16	25	41
1/2	88	119
5/8	165	224
3/4	297	403
9/16	121	164
7/8	440	597
1	638	865
1 1/8	840	1139
1 1/4	1180	1600
1 3/8	1570	2129
1 1/2	2070	2807

BOLT SIZES (METRIC)	TORQUE	
MILLIMETERS	Pounds-Foot	Newtons-Meter
M6	10	13
M8	22	30
M10	40	54
M12	59	80
M14	93	126
M16	130	176
M18	168	228
M20	205	278

Replace immediately if damaged

For H64 snowblower

656779

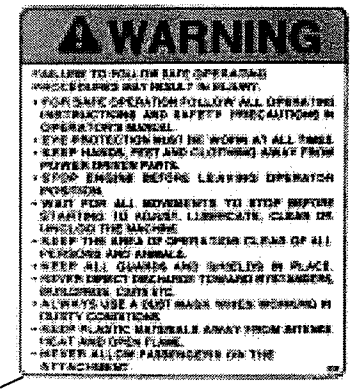

660988

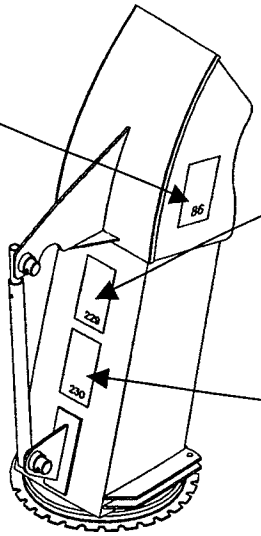

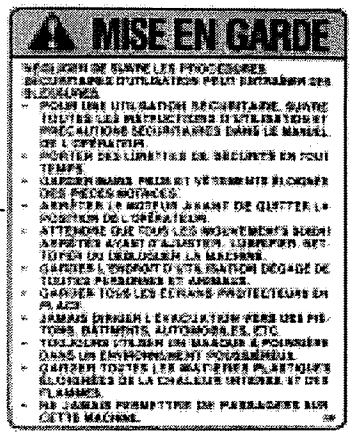

660989

656780

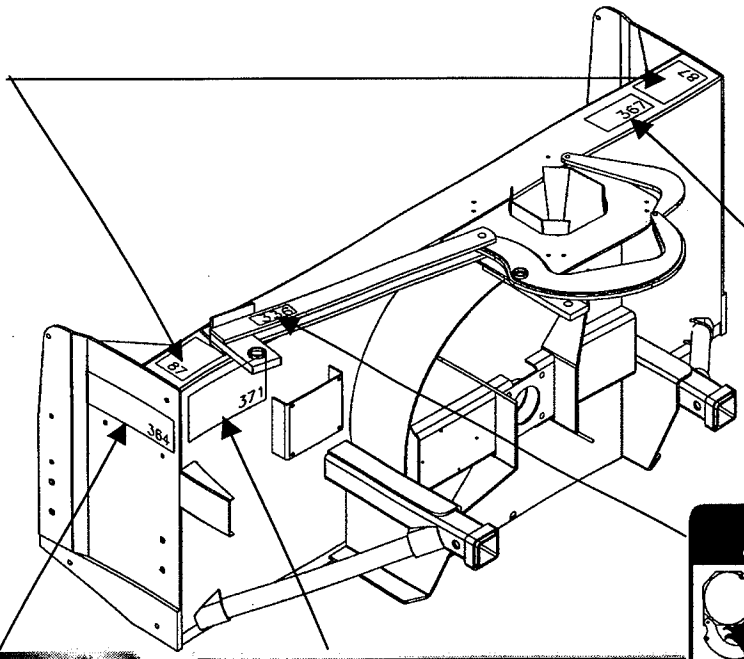

2500311

664548

2500308

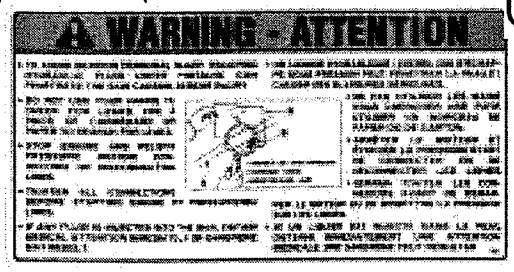

2500315

Replace immediately if damaged
For H76 & H84 snowblowers

656779

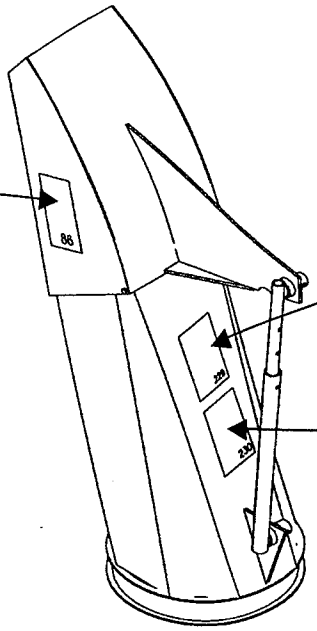

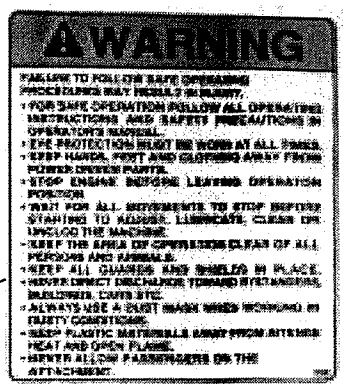

660988

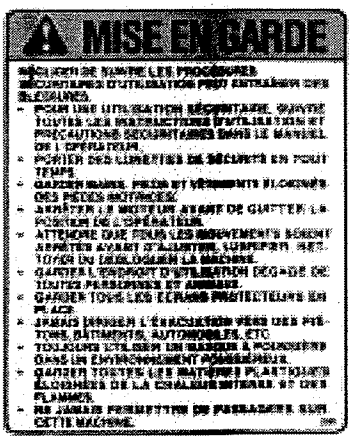

660989

656780

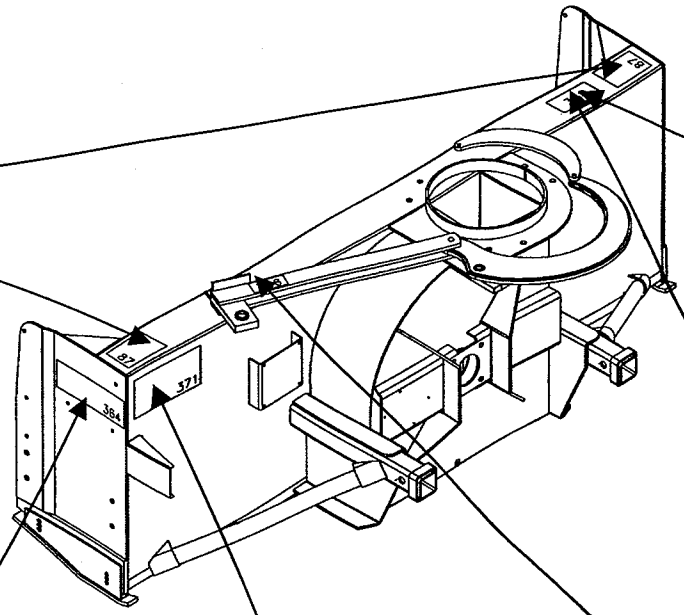

2500312

2500632

2500308

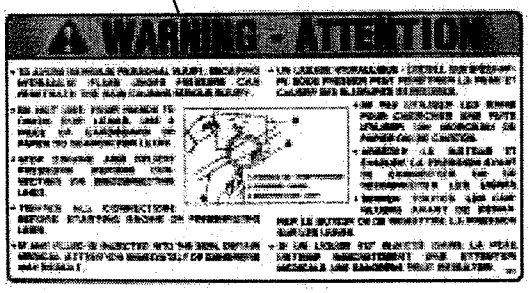

2500315

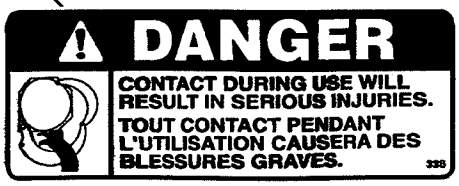

664548

HYDRAULIC SNOWBLOWER H64, H76 & H84

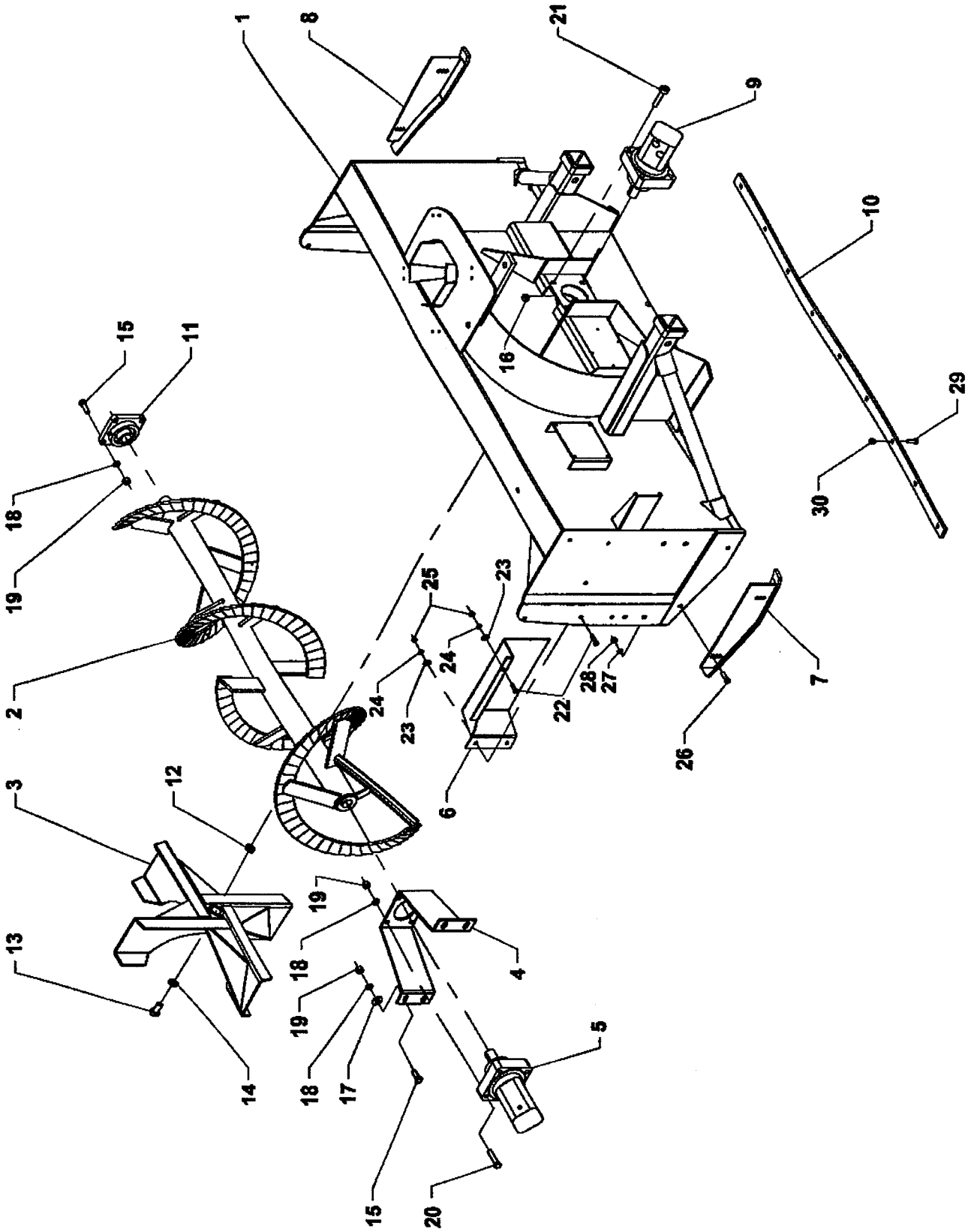

PARTS

HYDRAULIC SNOWBOWER H64, H76 & H84

REF.	DESCRIPTION	QTY	PART #
1	Housing	1	---
2	Auger **H64**	1	665856
	Auger **H76**	1	665928
	Auger **H84**		668230
3	Fan **H64**	1	665854
	Fan **H76 & H84**	1	665927
4	Motor support	1	665859
5	Hydraulic motor (auger) **H64**	1	3900020
	Hydraulic motor (auger) **H76 & H84**	1	3900024
6	Hose guard	1	665860
7	Left skid shoe	1	665443
8	Right skid shoe	1	665444
9	Hydraulic motor (fan) **H64**	1	3900019
	Hydraulic motor (fan) **H76 & H84**	1	3900023
10	Cutting edge **H64**	1	665857
	Cutting edge **H76**	1	665929
	Cutting edge **H84**		668235
11	Bearing 1 1/4"	1	4300001
12	Spacer	1	665858
13	Bolt hex. 5/8"NF x 1 1/2" GR 5, PTD	1	O/L
14	Lockwasher 5/8", PTD	1	O/L
15	Bolt hex. 1/2"NC x 1 1/2" GR 5, PTD	8	O/L
16	Nylon insert locknut 1/2"NC, PTD	4	O/L
17	Flat washer 9/16", PTD	4	O/L
18	Lockwasher 1/2", PTD	12	O/L
19	Nut hex. 1/2"NC, PTD	12	O/L
20	Bolt hex. 1/2"NC x 2 1/4" GR 5, PTD	4	O/L
21	Allen round head setscrew 1/2"NC x 2 1/2"	4	O/L
22	Bolt hex. 5/16"NC x 1 1/4" GR 5, PTD	4	O/L
23	Flat washer 5/16", PTD	4	O/L
24	Lockwasher 5/16", PTD	4	O/L
25	Nut hex. 5/16"NC, PTD	4	O/L
26	Carriage bolt 3/8"NC x 1 1/4" GR 5, PTD	4	O/L
27	Lockwasher 3/8", PTD	4	O/L
28	Nut hex. 3/8"NC, PTD	4	O/L
29	Plow bolt 3/8"NC x 1 1/4" GR 5 for **H64**	9	O/L
	Plow bolt 3/8"NC x 1 1/4" GR 5 for **H76**	11	O/L
	Plow bolt 3/8"NC x 1 1/4" GR 5 for **H84**	13	O/L
30	Stover nut 3/8"NC, PTD for **H64**	9	O/L
	Stover nut 3/8"NC, PTD for **H76**	11	O/L
	Stover nut 3/8"NC, PTD for **H84**	13	O/L

HYDRAULIC SYSTEM

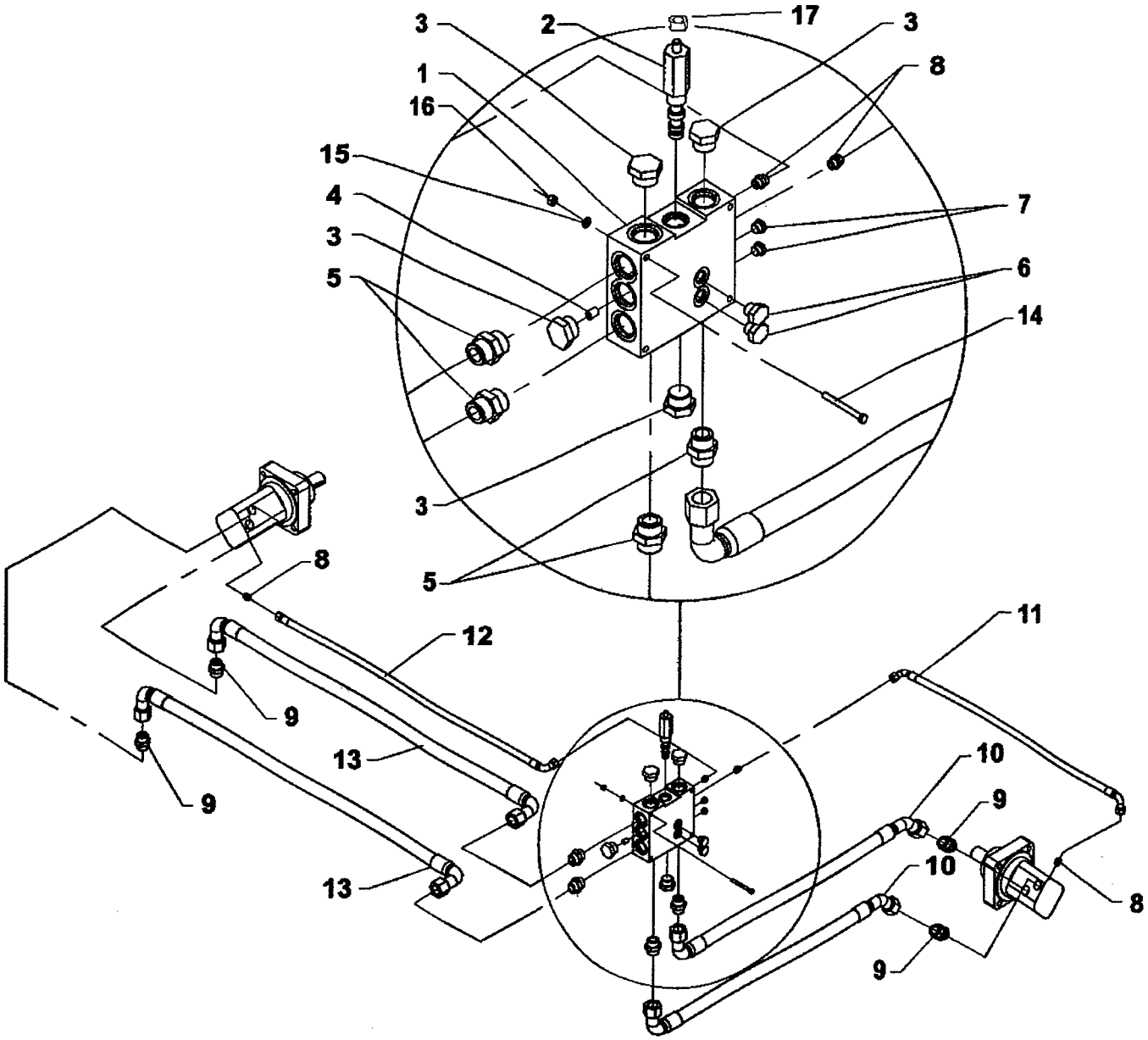

HYDRAULIC SYSTEM

REF.	DESCRIPTION	QTY	PART #
1	Hydraulic manifold	1	665872
2	Sequence valve – for 64"	1	3900021
	Sequence valve – for 76"		3900021
3	Plug 1 1/16" ORB	4	2600049
4	Flow restrictor "	1	665942
5	Union 1 1/16" male ORB x 1 1/16" male JIC	4	660571
6	Plug 9/16" ORB	2	655730
7	Plug 7/16" ORB	2	2600048
8	Adaptor 7/16" male ORB x 7/16" male JIC	4	664271
9	Adaptor 7/8" male ORB x 7/8" male JIC	4	2600038
10	Hose 5/8" x 32 1/2", 1 1/16"JIC swivel fem. short bend 90 x 7/8"JIC swivel fem. short bend 45	2	665906
11	Hose 1/4" x 28 1/8", 7/16"JIC swivel fem. short bend 90 x 7/16"JIC swivel fem. short bend 90	1	665905
12	Hose 1/4" x 47", 7/16"JIC swivel fem. short bend 90 x 7/16"JIC swivel fem. – for **H64**	1	665877
	Hose 1/4" x 53", 7/16"JIC swivel fem. short bend 90 x 7/16"JIC swivel fem. – for **H76**	1	665875
	Hose 1/4" x 57", 7/16"JIC swivel fem. short bend 90 x 7/16"JIC swivel fem. – for **H76**	1	3700135
13	Hose 5/8" x 42", 1 1/16"JIC swivel fem. short bend 90 x 7/8"JIC swivel short bend 90 – for **H64**	2	665901
	Hose 5/8" x 48", 1 1/16"JIC swivel fem. short bend 90 x 7/8"JIC swivel fem. short bend 90 – for **H76**	2	665900
	Hose 5/8" x 52", 1 1/16"JIC swivel fem. short bend 90 x 7/8"JIC swivel fem. short bend 90 – for **H76**	2	3700134
14	Bolt hex. 1/4"NC x 2 1/2" GR 5, PTD	4	O/L
15	Lockwasher 1/4", PTD	4	O/L
16	Nut hex. 1/4"NC, PTD	4	O/L
17	Hex. jam nut 3/8"NF PTD	1	1100009

CHUTE – FOR H64

REF.	DESCRIPTION	QTY	PART #
1	Chute	1	664792
2	Adjustment rod	1	654074
3	Adjustment tube	1	654076
4	Rotation bushing	1	659151
5	Retaining plate	1	665398
6	Retaining plate	1	665399
7	Spacer	4	665861
8	Cotter pin 1/4" x 2", PTD	2	O/L
9	Round wire lock pin 1/4"	1	1900006
10	Bolt hex 1/4"NC x 1 1/4" GR 5, PTD	8	O/L
11	Serrated flange nuts 1/4"NC, PTD	8	O/L

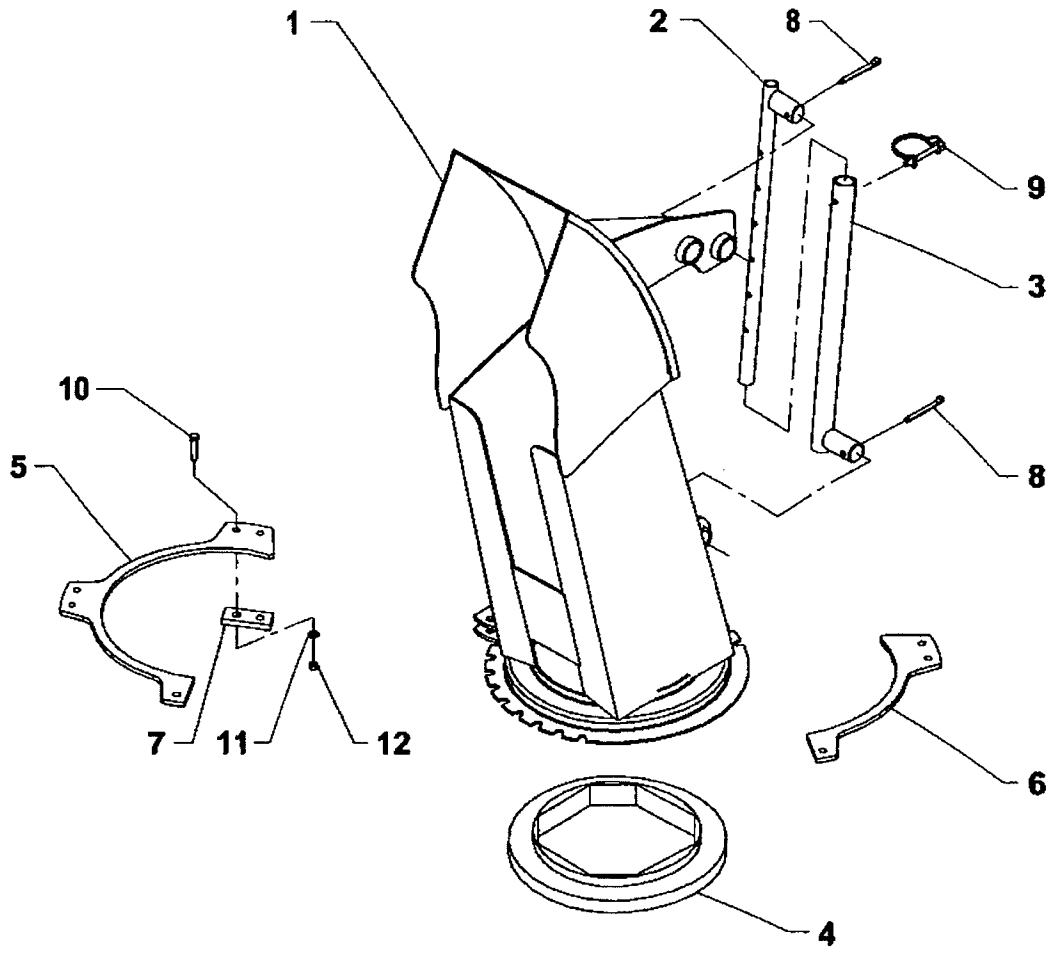

CHUTE – FOR H76 & H84

REF.	DESCRIPTION	QTY	PART #
1	Chute	1	664684
2	Adjustment rod	1	654074
3	Adjustment tube	1	654076
4	Rotation ring	1	662834
5	Retaining plate	2	665935
6	Spacer	3	665936
7	Spacer	3	665937
8	Cotter pin 1/4" x 2", PTD	2	O/L
9	Round wire lock pin 1/4"	1	1900006
10	Carriage bolt 1/2"NC x 1 3/4" GR 5, PTD	6	O/L
11	Lockwasher 1/2", PTD	6	O/L
12	Nut hex. 1/2"NC, PTD	6	O/L

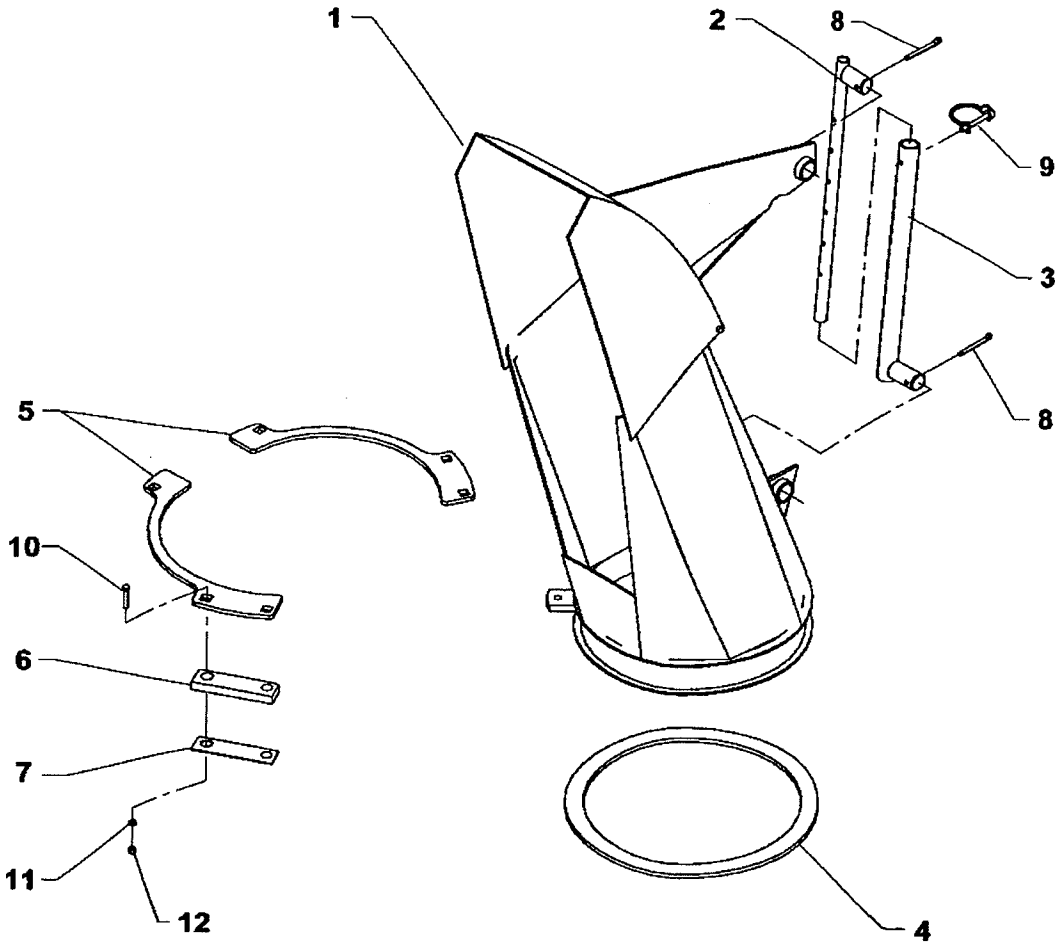

CHUTE ROTATION BY CYLINDER – FOR H64

RÉF.	DESCRIPTION	QTY	PART #
1	Hydraulic cylinder bracket	1	664450
2	Bell Crank	1	664451
3	Push arm	1	664452
4	Pivot spacer	1	664429
5	Rotation bushing	1	664428
6	Flat washer7/16" PTD	1	O/L
7	Nut hex. 3/8" NC PTD	1	O/L
8	Lockwasher 3/8" PTD	1	O/L
9	Nut stover 5/16" NC PTD	2	O/L
10	Flat washer 3/8" PTD	2	O/L
11	Shoulder screw 3/8" x 1" x 5/16" NC PTD	1	664583
12	Bolt hex. 5/8" NC x 3 3/4" GR 5, PTD	1	O/L
13	Bolt hex. 3/8" NC x 1" GR 5, PTD	1	O/L
14	Shoulder screw 3/8" NC x 3/4" x 5/16" PTD	1	664576
15	Flat washer nylon 7/16" PTD	1	O/L
16	Lockwasher 5/8" PTD	1	O/L
17	Nut 5/8" NC PTD	1	O/L
18	Flat washer 11/16" PTD	1	O/L
19	Flat washer 1 1/16" PTD	1	O/L

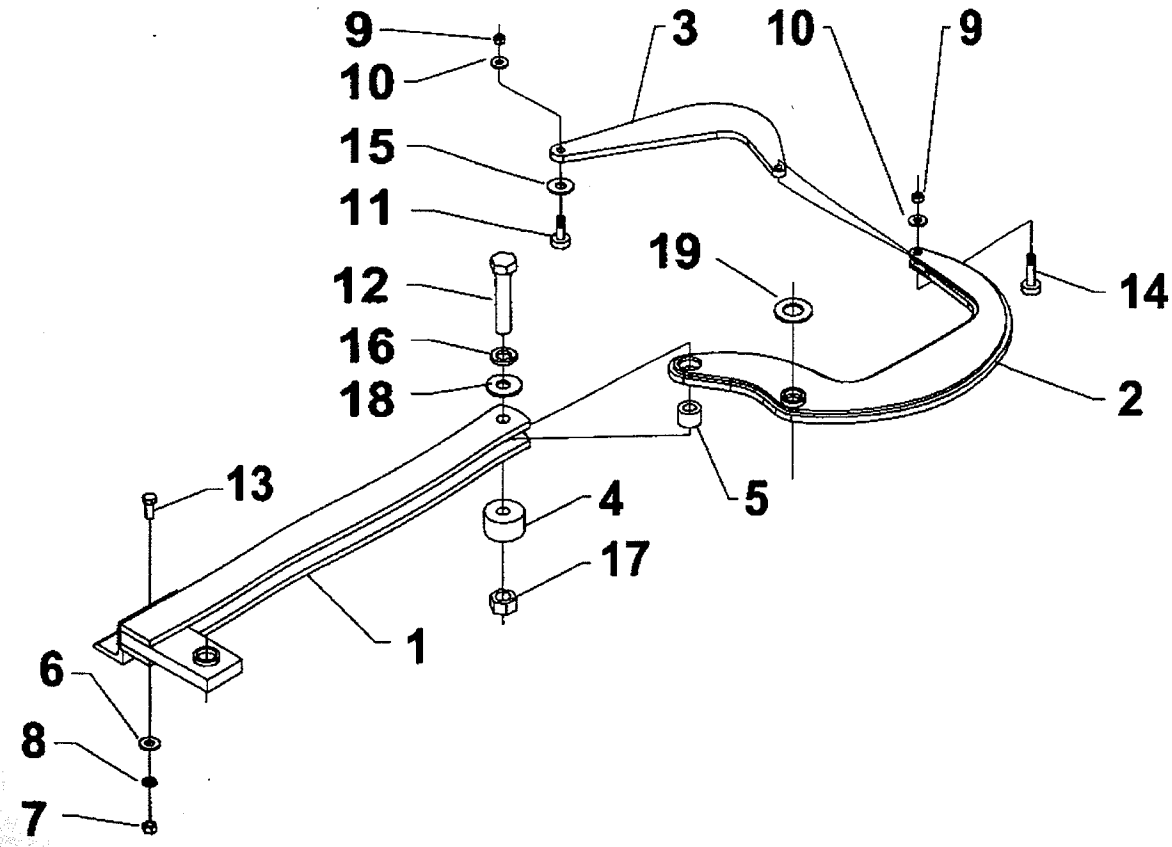

CHUTE ROTATION BY CYLINDER – FOR H76 & H84

RÉF.	DESCRIPTION	QTY	PART #
1	Hydraulic cylinder bracket	1	664450
2	Bell crank	1	664518
3	Push arm	1	664501
4	Pivot spacer	1	664429
5	Rotation bushing	1	664428
6	Spacer	1	665943
7	Bolt hex. 3/8"NC x 1" GR 5, PTD	1	O/L
8	Bolt hex. 5/8"NC x 3 3/4" GR 5, PTD	1	O/L
9	Nut hex. 5/8"NC, PTD	1	O/L
10	Shoulder screw 3/8" x 1 1/4" x 5/16"NC PTD	1	3200013
11	Nut stover 5/16"NC, PTD	2	O/L
12	Shoulder screw 3/8" x 3/4" x 5/16" NC PTD	1	664576
13	Lockwasher 3/8", PTD	1	O/L
14	Lockwasher 5/8", PTD	1	O/L
15	Flat washer 3/8", PTD	3	O/L
16	Flat washer 7/16", PTD	1	O/L
17	Nut hex. 3/8"NC, PTD	1	O/L
18	Flat washer 1 1/16", PTD	1	O/L

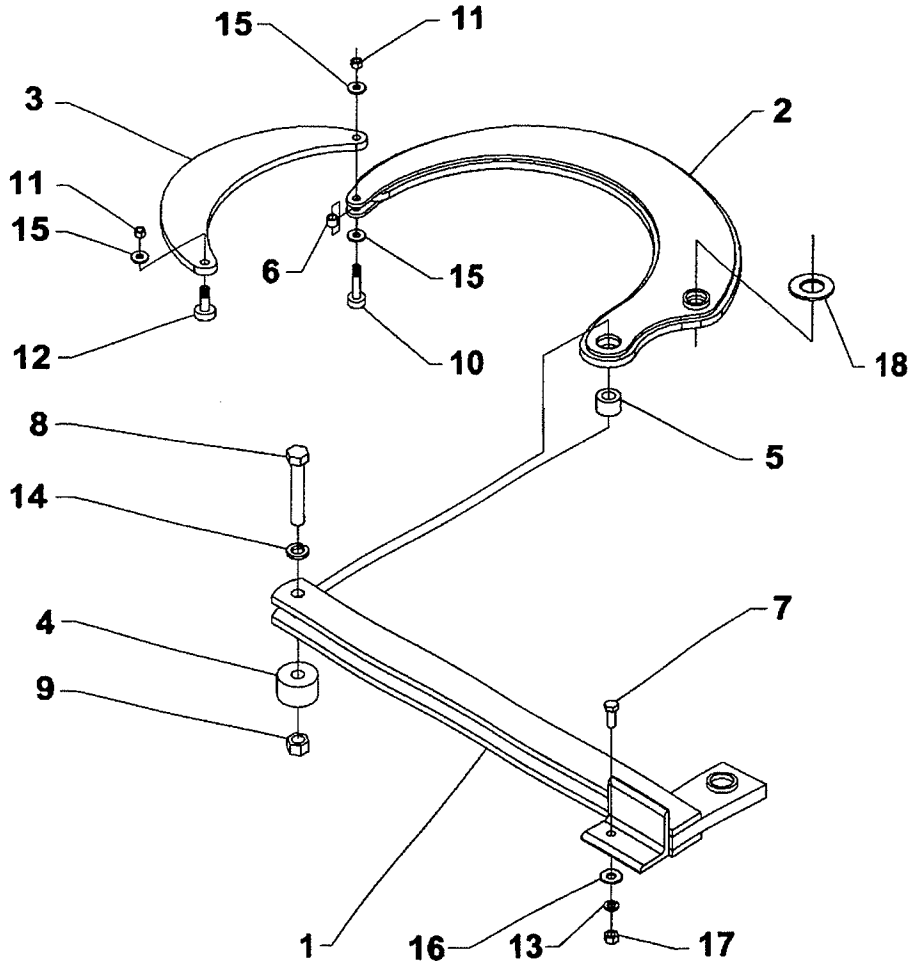

UNIVERSAL HITCH - 8153

REF.	DESCRIPTION	QTY	PART #
1	Hitch	1	665881
2	Hitch arm	2	665882
3	Upper bracket	1	665883
4	Bolt hex. 3/4" NC x 6", PTD gr.5	2	O/L
5	Bolt hex. 3/4" NC x 3 1/2", PTD gr.5	2	O/L
6	Bolt hex. 5/8" NC x 2", PTD gr.5	1	O/L
7	Bolt hex. 5/8" NC x 1 1/2", PTD gr.5	1	O/L
8	Lockwasher 5/8", PTD	2	O/L
9	Lockwasher 3/4", PTD	4	O/L
10	Nut hex. 5/8" NC, PTD	2	O/L
11	Nut hex. 3/4" NC, PTD	4	O/L

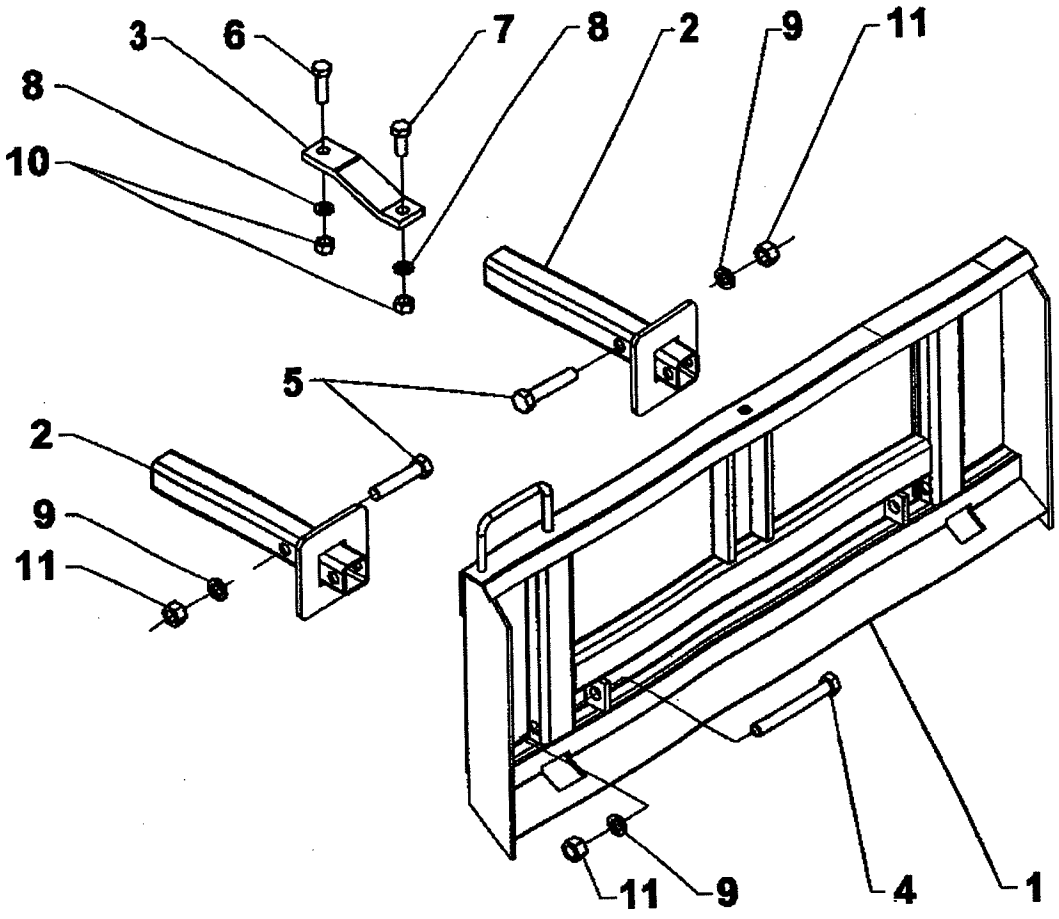

DRIFT CUTTERS – 8152

REF.	DESCRIPTION	QTY	PART #
1	Left drift cutter	1	665874
2	Right drift cutter	1	665879
3	Bolt hex. 3/8"NC x 1", PTD, gr.5	2	O/L
4	Bolt hex. 5/16"NC x 1", PTD, gr.5	1	O/L
5	Bolt hex 1/2"NC x 1 1/4", PTD, gr.5	1	O/L
6	Lockwasher 3/8", PTD	2	O/L
7	Lockwasher 5/16", PTD	1	O/L
8	Lockwasher 1/2", PTD	1	O/L
9	Nut hex. 3/8"NC, PTD	2	O/L
10	Nut hex. 5/16"NC, PTD	1	O/L
11	Nut hex. 1/2"NC, PTD	1	O/L

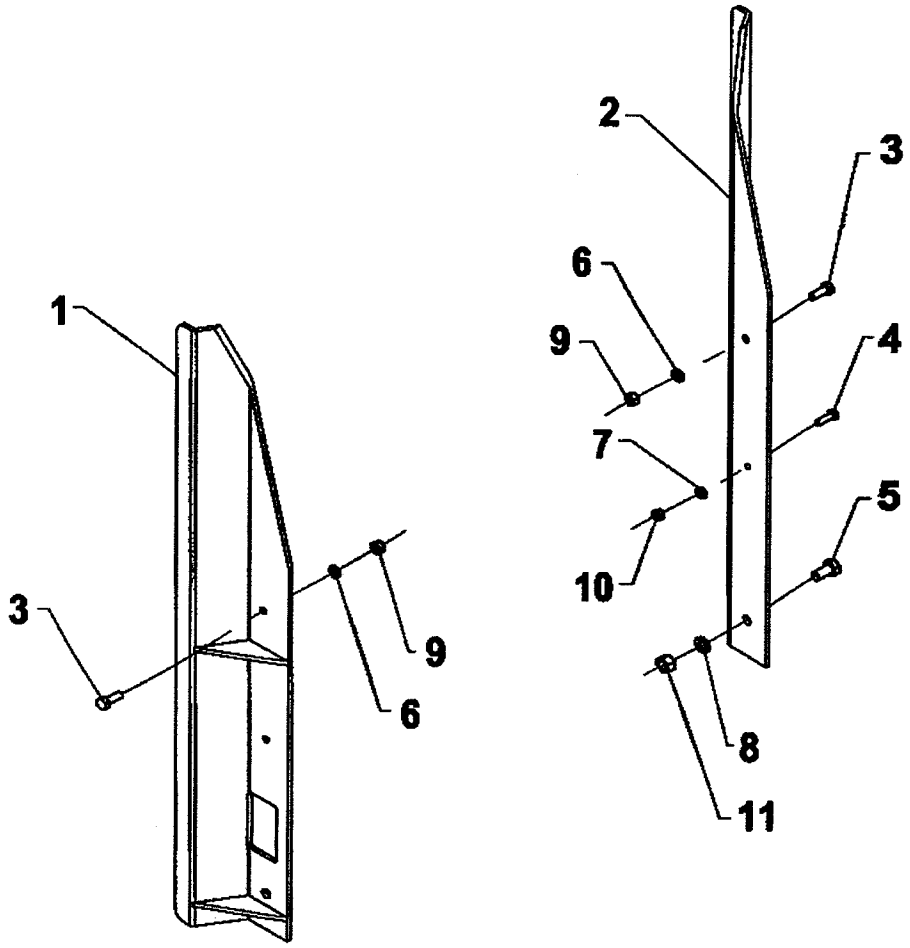

HYDRAULIC ROTATION- 8183

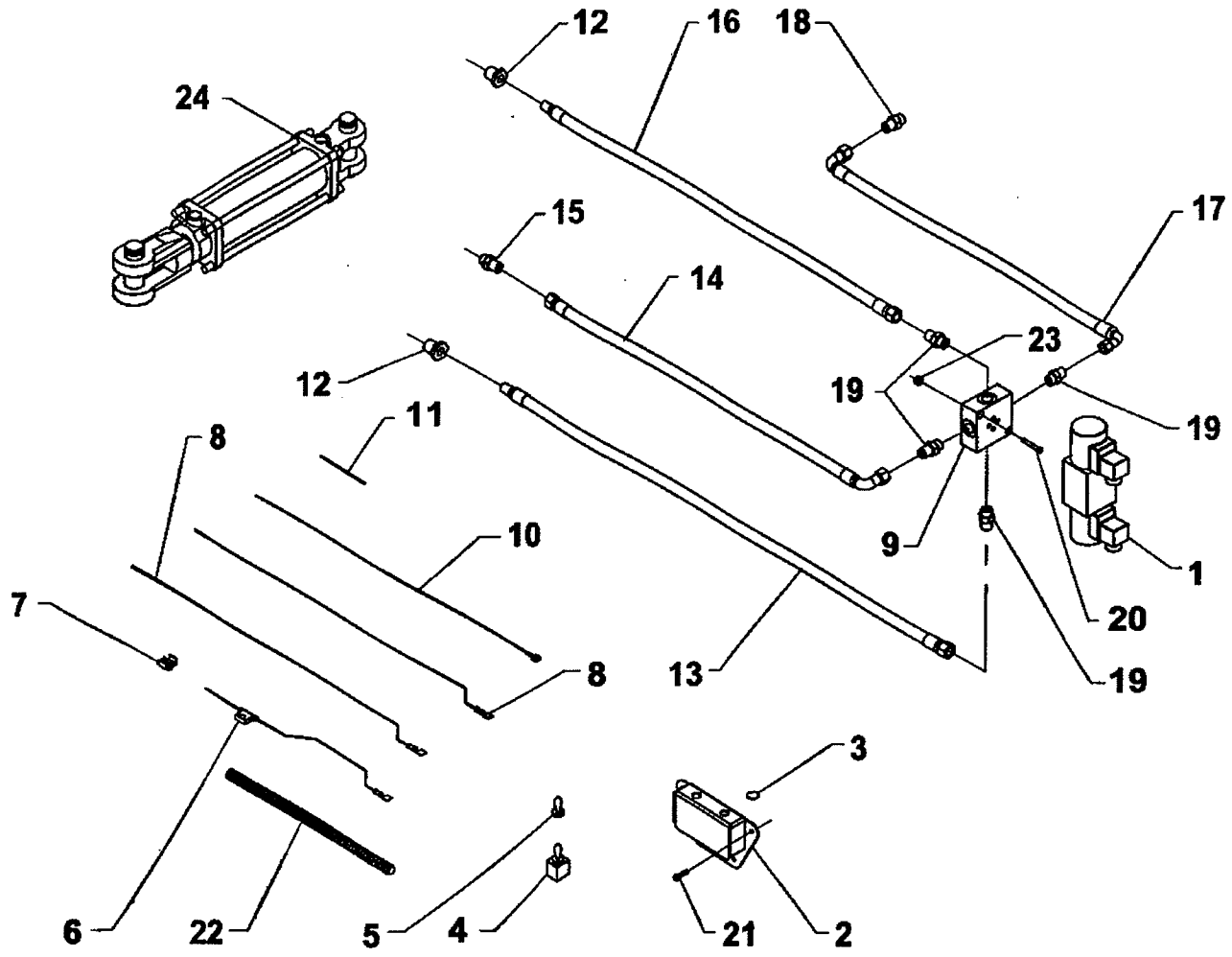

HYDRAULIC ROTATION - 8183

REF.	DESCRIPTION	QTY	PART #
1	Electro-hydraulic valve	1	3900027
2	Switch box	1	666048
3	Plastic cap	1	662530
4	Switch 6 blades	1	4000027
5	Rubber cap	1	658666
6	Fuse wire 72"	1	666065
7	Tap connector	1	656665
8	Positive wire 360"	2	666066
9	Electro-hydraulic valve manifold	1	3900028
10	Negative wire 360"	1	666067
11	Negative wire 9"	1	666068
12	Adaptor 1/2"NPT male x 1/4"NPT female	2	657798
13	Hose 1/4"x34", 9/16"JIC swivel fem. x 1/4" swivel male	1	3700010
14	Hose 1/4"x24", 9/16"JIC swivel fem. short bend 90 x 9/16"JIC swivel fem.	1	3700007
15	Flow restrictor 5/64"	1	666069
16	Hose 1/4"x27", 9/16"JIC swivel fem. x 1/4" swivel male	1	3700009
17	Hose 1/4"x22 1/4", 7/16"JIC swivel fem. short bend 90 x 9/16"JIC swivel fem. short bend 90	1	3700008
18	Adaptor 7/16" male ORB x 7/16" male JIC	1	664271
19	Adaptor 9/16" male ORB x 9/16" male JIC	4	661544
20	Socket head capscrew #10-24 x 1 1/4" GR 5, PTD	2	O/L
21	Self-drilling screw #10-24 x 1/2"	4	O/L
22	Loom	1	666053
23	Nylon insert locknut #10-24 PTD	2	O/L
	Cylinder kit 8150		
23	Cylinder 3" x 8"	1	654129
	Seal kit for 654129 cylinder (not shown)	1	664176

HYDRAULIC DEFLECTOR - 8184

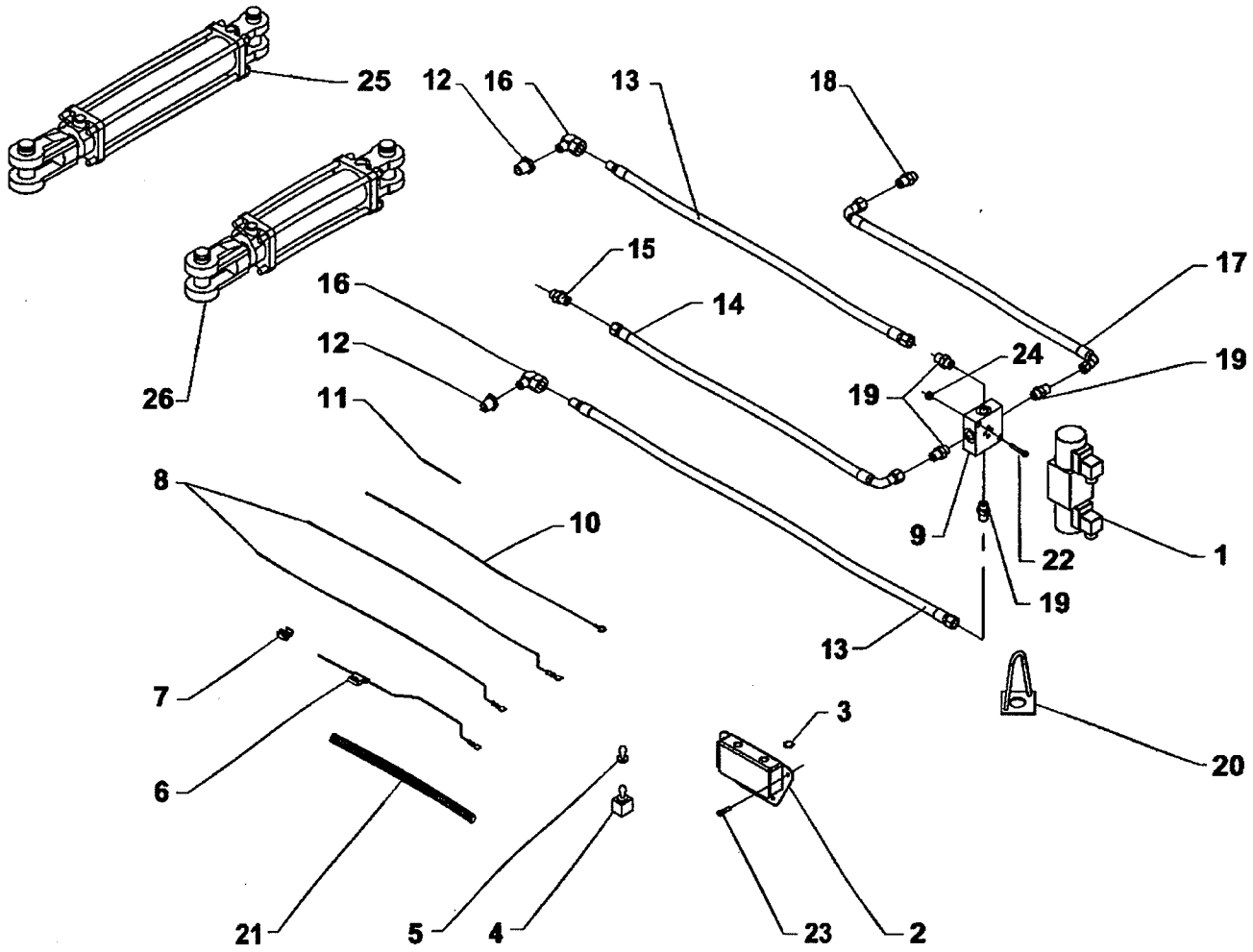

HYDRAULIC DEFLECTOR - 8184

REF.	DESCRIPTION	QTY	PART #
1	Electrio-hydraulic valve	1	3900027
2	Switch box	1	666048
3	Plastic cap	1	662530
4	Switch 6 blades	1	4000027
5	Rubber cap	1	658666
6	Fuse wire 72"	1	666065
7	Tap connector	1	656665
8	Ground wire 360" (white)	2	666066
9	Electro-hydraulic valve manifold	1	3900028
10	Negative wire 360" (black)	1	666067
11	Negative wire 9"	1	666068
12	Flow restrictor 1/2"NPT male x 3/8"NPT female	2	654551
13	Hose 1/4" x 83", 9/16"JIC swivel fem. x 1/4" swivel male	2	3700011
14	Hose 1/4" x 37", 9/16"JIC swivel fem. short bend 90 x 9/16"JIC swivel fem.	1	3700016
15	Flow restrictor 5/64"	1	666069
16	Elbow 90°, 3/8"NPT male x 1/4"NPT swivel female	2	654438
17	Hose 1/4" x 45", 7/16"JIC swivel fem. short bend 90 x 9/16"JIC swivel fem. short bend 90	1	3700017
18	Adaptor 7/16" male ORB x 7/16" male JIC	1	664271
19	Adaptor 9/16" male ORB x 9/16" male JIC	4	661544
20	Hose support	1	666072
21	Loom	1	666053
22	Socket head capscrew #10-24 x 1 1/4", PTD	2	O/L
23	Self-drilling screw #10-24 x 1/2", PTD	4	O/L
24	Nylon insert locknut #10-24 PTD	2	O/L
	Hydraulic cylinder 8150 for H76		
25	Cylinder 3" x 8"	1	654129
	Seal kit for 654129 cylinder (not shown)		664176
	Hydraulic cylinder 8155 for H64		
26	Cylinder 2" x 6"	1	3900002
	Seal kit for 3900002 cylinder (not shown)		2600047

ELECTRIC ROTATION /DEFLECTOR- 8151

REF.	DESCRIPTION	QTY	PART #
1	Electric actuator	1	662983
2	Switch box	1	666048
3	Switch	1	663383
4	Rubber cap	1	658666
5	Plastic cap	1	662530
6	Clevis – rod end	1	666049
7	Clevis – fixed end	1	666050
8	Pin 1"	2	666057
9	Ground wire 72" (black)	1	666054
10	Tap connector	1	656665
11	Fuse wire 72" (red)	1	666055
12	Actuator wire	1	666056
13	Spring pin 3/16" x 1 3/4", PTD	2	O/L
14	Hairpin 4mm x 80mm, PTD	2	O/L
15	Self-drilling screw #10 x 1/2", PTD	4	O/L
16	Bolt hex. 1/2"NC x 2 1/2" GR 5, PTD	2	O/L
17	Nylon insert locknut 1/2"NC, PTD	2	O/L
18	Loom	1	666053

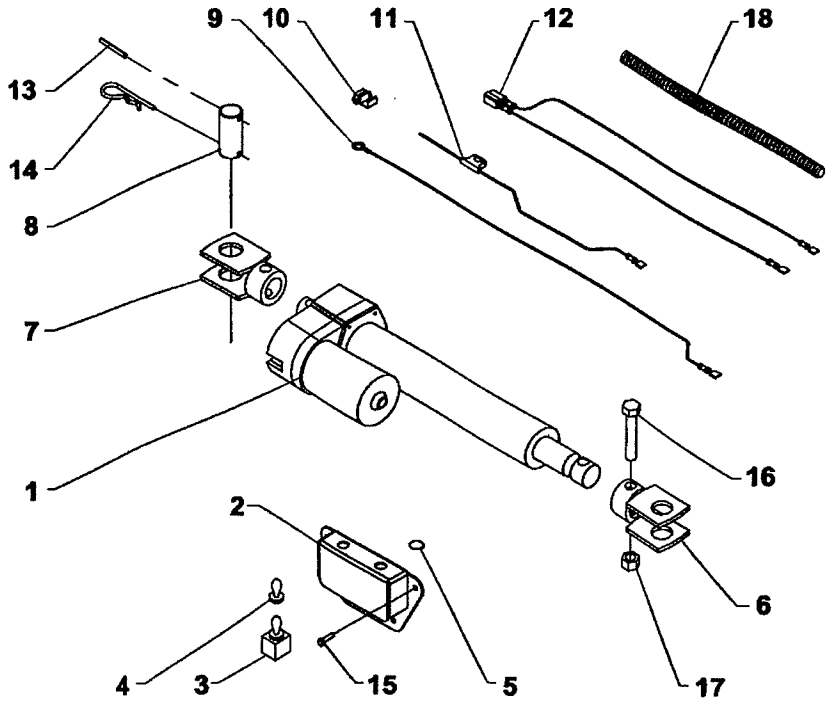

ELECTRIC DEFLECTOR - 8154

REF.	DESCRIPTION	QTY	PART #
1	Electric actuator	1	665573
2	Switch box	1	666048
3	Switch	1	663383
4	Rubber cap	1	658666
5	Plastic cap	1	662530
6	Clevis – rod end	1	666049
7	Clevis – fixed end	1	666051
8	Pin 1"	2	666057
9	Ground wire 72" (black)	1	666054
10	Tap connector	1	656665
11	Fuse wire 72" (red)	1	666055
12	Actuator wire	1	666056
13	Spring pin 3/16" x 1 3/4", PTD	2	O/L
14	Hairpin 4mm x 80mm, PTD	2	O/L
15	Self-drilling screw #10 x 1/2", PTD	4	O/L
16	Bolt hex. 1/2"NC x 2 1/2", PTD	2	O/L
17	Nylon insert locknut 1/2"NC, PTD	2	O/L
18	Loom	1	666053

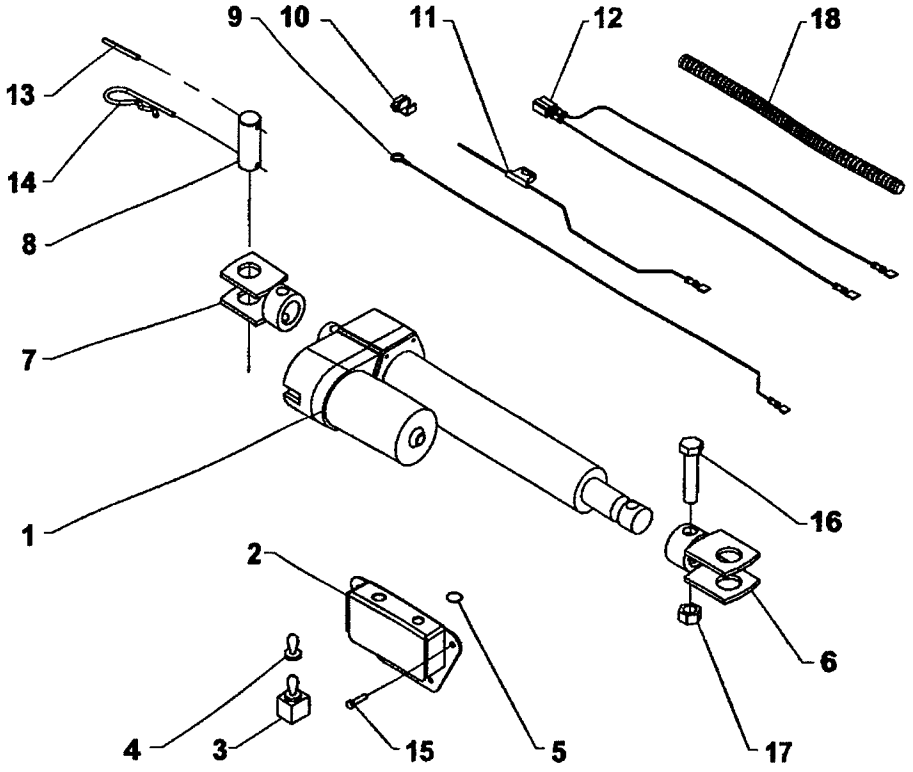

HYDRAULIC MOTOR

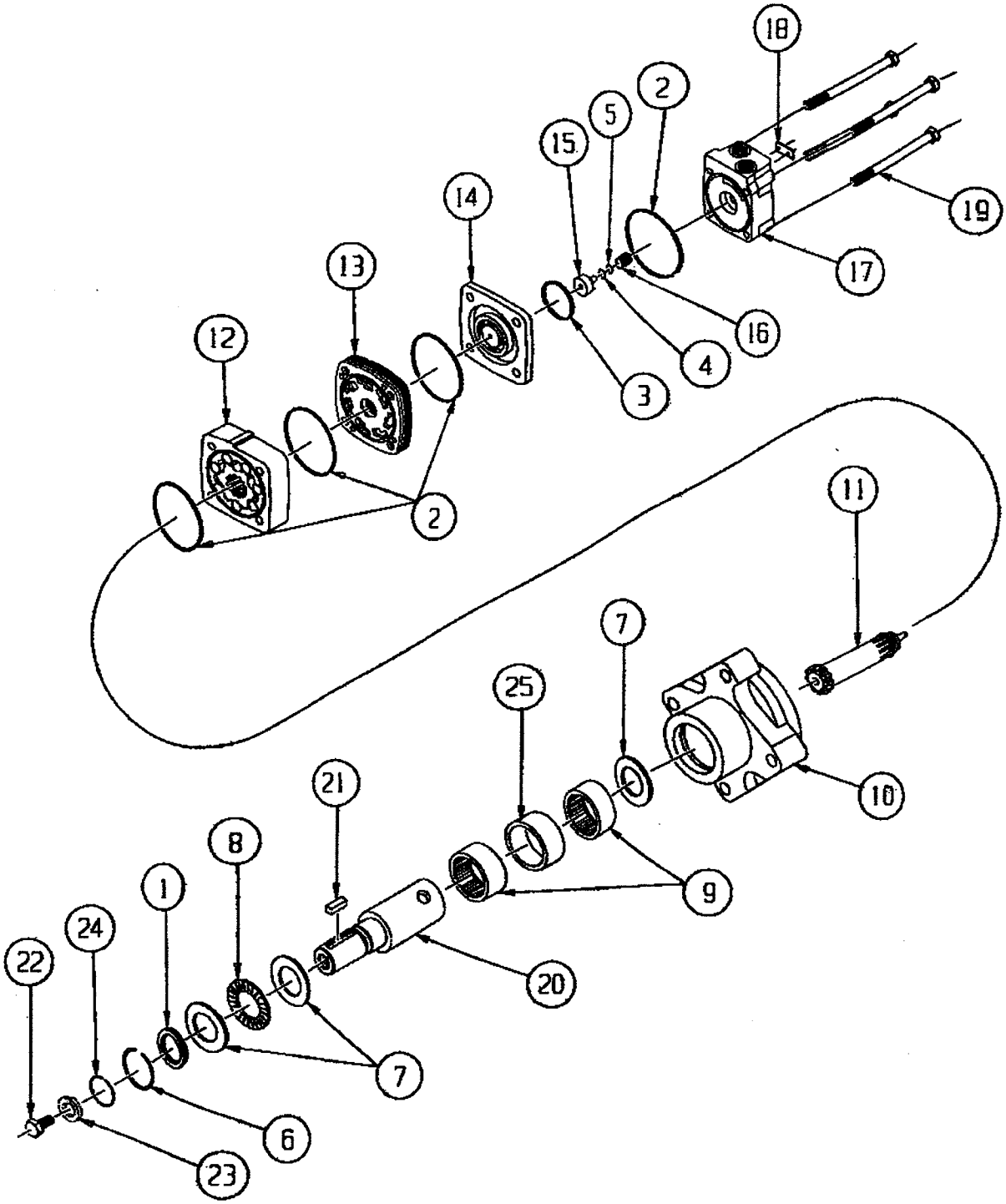

HYDRAULIC MOTOR

REF.	DESCRIPTION	QTY	PART #
	Seal Kit (Includes #1 to 5)		3900042
1	Dust seal	1	-----
2	Body seal	4	-----
3	Commutator seal	1	-----
4	O-Ring seal	1	-----
5	Teflon backup seal	1	-----
6	Snap ring	1	3900043
7	Thrust washer	1	3900044
8	Thrust bearing	1	3900045
9	Housing bearing	1	3900046
10	Housing Kit, (includes#7, #9, #25)	1	3900047
11	Drive link kit for 3900019	1	3900048
	Drive link kit for 3900023	1	3900049
	Drive link kit for 3900020	1	3900050
	Drive link kit for 3900024	1	3900051
12	Rotor for 3900019	1	3900052
	Rotor for 3900023	1	3900053
	Rotor for 3900020	1	3900054
	Rotor for 3900024	1	3900055
13	Manifold	1	3900056
14	Commutator assembly	1	3900057
15	Endcover piston	1	3900059
16	Piston spring	1	3900060
17	Endcover (include #4, #5, #15, #16)	1	3900063
18	Serial number plate	1	---
19	Bolt set kit (4) for 3900019	1	3900064
	Bolt set kit (4) for 3900023	1	3900065
	Bolt set kit (4) for 3900020	1	3900066
	Bolt set kit (4) for 3900024	1	3900067
20	Shaft 1 1/4"	1	3900068
21	key	1	3900069
22	Hex. bolt 5/8"NF x 1 1/4", PTD	1	O/L
23	Lockwasher 5/8", PTD	1	O/L
24	Wire ring	1	3900070
25	Bearing spacer	1	3900071
	2000 PSI relief valve (not shown)	1	3900061
	3000 PSI relief valve (not shown)	1	3900062
	Midmount commutator (not shown)	1	3900058

RAD TECHNOLOGIES INC

Thetford Mines Division

RAD TECHNOLOGIES INC. warrants to the original buyer that the equipment is free from defects in material and workmanship. RAD TECHNOLOGIES INC.'s obligation, under this warranty, will be limited to the repair or replacement of any non-wear part or component, which RAD TECHNOLOGIES INC. finds to be defective within **one year** from the date of original purchase (unless otherwise-specified). The applicable warranty period for commercial or rental use shall be ninety (90) days from the date of purchase

In no event shall RAD TECHNOLOGIES INC. be liable for consequential, special, direct or indirect damages incurred by the buyer/user.

All components not manufactured by RAD TECHNOLOGIES INC. (such as motors, actuators, hydraulic components, tires, ...etc.) are covered by the original manufacturer's warranty in conjunction with RAD TECHNOLOGIES INC.

RAD's obligation under this warranty shall be limited to repairing or replacing, free of charge to the original purchaser, any part that, in RAD's judgment, shall show evidence of such defect, provided the **distributor** returns the part prepaid within thirty (30) days from date of failure.

This warranty shall not be interpreted to render RAD TECHNOLOGIES INC. liable for injuries or damages of any kind or nature to person or property. This warranty does not extend to losses because of delays, or to any expenses or losses incurred for labor, substitute machinery, rental or for any other reason.

Except as set forth above, RAD TECHNOLOGIES INC. shall have no obligation or liability of any kind on account of any of its equipment and shall not be liable for special or consequential damages. RAD TECHNOLOGIES INC. makes no other warranty, expressed or implied, and specifically, RAD TECHNOLOGIES INC. disclaims any implied warranty or merchantability or fitness for a particular purpose. **Some states or provinces do not permit limitations or exclusions of implied warranties or incidental or consequential damages, so the limitations or exclusions in this warranty may not apply.**

This warranty is subject to any existing conditions of supply, which may directly affect our ability to obtain materials or manufacture replacement parts. RAD TECHNOLOGIES INC. reserves the right to make improvements in design or changes in specifications at any time, without incurring any obligation to owners of units previously sold.

No one is authorized to alter, modify or enlarge this warranty nor the exclusions, limitations and reservations.

2835 Chemin de l'Aéroport, Thetford Mines (Québec) G6G 5R7

Tél.: (418) 338-4499 Fax: (418) 388-6090
Internet : www.radinter.com Courriel : radtech@radinter.com

Manufactured by:

RAD TECHNOLOGIES INC.
Division Thetford Mines
2835, Chemin de l'Aéroport
Thetford Mines, Québec, Canada, G6G 5R7
Tel.: (418) 338-4499 - Fax.: (418) 338-6090
E-mail : radtech@radinter.com
Internet : www.radinter.com

Printed in Canada